HENAN MINE CRANE CO., LTD.

Tel: 0086-373-3088011 ■ E-mail: info@hnkscrane.com ■ Fax: 0086-373-3352688 ■ Web:www.hnkscrane.com

Add: Cross of Mine Road and Weisan Road,Changnao Crane Industrial Zone,Changyuan,Henan,China

河南矿山 HENAN MINE

HENAN MINE GROUP

HENAN MINE CRANE CO., LTD.

Since January 2010, KuangYuan brand is protected by the Chinese well-known trademark, beware of counterfeit.

- Famous Lifting and Material Transportation Industry of China
- Top Brand of Chinese Crane/ Top 100 Machinery Enterprise in China
- ISO / China National Quality Standard

HENAN MINE GROUP

Play a leading role in the crane industry in China
Stride forward to become a top-class crane enterprise in the world

CONTENTS

01 CONTENTS
03 ENTERPRISE INTRODUCTION
07 QUALIFICATION & HONOR
15 SERIES PRODUCT
39 PRODUCTION EQUIPMENTS
45 DELIVERY AND INSTALLATION
49 CUSTOMER VISIT
51 COOPERATIVE PARTNER

ENTERPRISE INTRODUCTION

Henan Mine Crane Co.,Ltd. (hereinafter called "HMC") is a shareholding industry enterprise, established in 2002, engaged in the manufacture and sale of "Kuangyuan" brand electric hoists/single or double beam overhead cranes/gantry cranes/grab bucket cranes/foundry cranes/explosion proof cranes, rail mounted/ rubber tyre container gantry crane, and relevant spare parts. HMC is a director-level member of China Lifting Industry Association and China Heavy Machinery Industry Association.

HMC has more than 2700 staffs and floor area of 680,000 square meters, and owns RMB0.66billion capital fund and over 380 sales branches around the world. HMC has more than 1200 sets of advanced equipment that enable HMC to be able to finish independently over 20 technologic flows, including lathing, milling, planning and grinding. HMC has more than 180 medium and senior technical staff, they are responsible for the design and production guidance for the whole crane products. HMC has obtained ISO9001:2000 the quality management system certification, ISO14001:1996 the environmental management system certification and OHSAS18001 the occupational health management system certification. HMC has a perfect quality-control system, a strict management system, strong production capability and advanced testing measures to ensure the production of high quality products.

HMC makes investment continually, and all kinds of economic index grow by 30% annually. HMC crane products are very popular in both local market and oversea market, HMC crane products have been sold to more than 30 provinces and cities in China, i.e the sales quantity of single beam overhead crane has

ranked No.1 for seven consecutive years in China local market. Meanwhile, HMC crane products have been exported to Australia, America,Vietnam, India, Pakistan, Bangladesh, Thailand, the Philippines, Malaysia,

Singapore, Malta, Turkmenistan, Saudi Arabia, Ethiopia, Egypt, Peru and other countries and regions.

Every year, HMC manufactures and sells more than 4000 sets of double beam overhead crane and gantry crane, more than 35000 sets of single beam overhead crane, more than 46000 sets of single beam₩double beam electric hoist and relevant accessories. HMC per capita output value and economic benefits are at the first level in the same industry.

HMC has won more than 120 honors, such as "Technological Progressive Enterprise", " China Famous Trademark", "China Famous Crane Top 10 Brands", "Henan Famous Products", "Henan Famous Trademark", "Quality Management Qualified Enterprise", "High Credit Enterprise", "Enterprise without Counterfeit, Fraud or Unjust Competition", " Quality Trustworthy Enterprise", " Technological Advanced Eterprise " and " CCTV Listed Brands".

HMC is a high&new technology enterprise in Henan Province, through continuous technology innovation, developing new products, improving the technological content ofproducts to meet the market demands for higher quality hoisting equipments. On the basis of the digestion and absorption of advanced crane design and manufacturing technology in China and abroad, HMC makes the great effort to redesign the

electric hoists and single and double beam cranes, keep pace with other international companies of similar products and have occupied a leading position in the market.

HMC is located in China's central plains, with superior geographical position and people, with scientific management system, automatic office system, huge production capacity, advanced inspection ways and strong sales network, then producing the "Kuangyuan" brand series products which has high quality and reasonable prices to serve the markets at home and abroad. HMC people has the determination to make the company be the first class enterprise in the crane industry in China, and is making the great efforts with their wisdom and ability to write the most brilliant Chinese nation's industrial flying chapter!

Quality forges the brand, integrity weaves bright future. Your ideal is HMC pursuit, HMC sincerely hopes to cooperate with all friends from all over the world and create larger brilliance together!!!

QUALIFICATION & HONOR

More than 120 honorary title

- Hi-tech Enterprise of Henan
- China Famous Brand
- 2009 Top 50 in Lifting and Transportation Industry of China
- Top 10 Brands of Chinese Crane
- Famous Commodity of Henan
- Famous Brand of Henan
- Famous Product of Henan
- Enterprise Satisfying Standards for Overall Quality Management
- Contract-honoring and Promise-keeping Enterprise
- Enterprise Free from Faked Product, Fraud or Unfair Competition
- Quality Trust-worthy Unit
- Brand Promoted by CCTV
- Certificate of Xinxiang Mayor Quality Award
- National Gantry and Bridge Lifting Machinery Industry Brand Demonstration Area Model Enterprise

营业执照

(副 本)

统一社会信用代码 91410728742545261 2
(1—20)

名 称 河南省矿山起重机有限公司
类 型 有限责任公司(自然人投资或控股)
住 所 长垣县长恼工业区矿山路与纬三路交汇处
法定代表人 崔培军
注册资本 伍亿陆仟柒佰万圆整
成立日期 2002年09月30日
营业期限 2002年09月30日至2020年09月29日
经营范围 单、双梁、桥式、门式起重机（含防爆、冶金起重机）、悬臂机、电动平车、钢丝绳电动葫芦及其零部件的设计、制造、销售、安装、维修、租赁；减速机、电机的研发、制造、销售；锻打（涉及许可经营项目的凭许可证核准的范围经营）；经营本企业自产产品及技术的出口业务和本企业所需的机械设备、零配件、原辅材料及技术的进出口业务（国家限定公司经营或禁止进出口的商品及技术除外）*
（依法须经批准的项目，经相关部门批准后方可开展经营活动）

登记机关

20年 07月 13日

企业信用信息公示系统网址：http://gsxt.hnaic.gov.cn

中华人民共和国国家工商行政管理总局监制

CERTIFICATE

质量管理体系认证证书

证书编号：00216Q13837R3M

兹证明

河南省矿山起重机有限公司

管理体系符合

GB/T 19001-2008/ISO 9001:2008

《质量管理体系 要求》

覆盖的产品及其过程

桥式起重机、门式起重机、铁路线电动葫芦的设计、开发、制造

和售后服务

生效日期：2016年07月05日　有效期至：2018年09月15日

注册号：CQM-41-2007-0002-0001

二零一六年七月五日

CNAS

方圆标志认证集团

CERTIFICATE

环境管理体系认证证书

证书编号：00216E21637R3M

兹证明

河南省矿山起重机有限公司

管理体系符合

GB/T 24001-2004/ISO 14001:2004

《环境管理体系 要求及使用指南》

覆盖的产品及其过程

桥式起重机、门式起重机、铁路线电动葫芦的设计、开发、制造

和售后服务及相关管理活动

生效日期：2016年07月05日　有效期至：2018年09月15日

注册号：CQM-41-2007-0002-0002

二零一六年七月五日

CNAS

方圆标志认证集团

CERTIFICATE

职业健康安全管理体系

认证证书

证书编号：0021H611317R3M

兹证明

河南省矿山起重机有限公司

管理体系符合

GB/T 28001-2011/OHSAS 18001:2007

《职业健康安全管理体系 要求》

覆盖的产品及其过程

桥式起重机、门式起重机、铁路线电动葫芦的设计、开发、制造

和售后服务及相关管理活动

生效日期：2016年07月05日　有效期至：2019年07月04日

注册号：CQM-41-2007-0002-0003

二零一六年七月五日

CNAS

方圆标志认证集团

IQNet

THE INTERNATIONAL CERTIFICATION NETWORK

CERTIFICATE

IQNet and CQM
hereby certify that the organization

Henan Kuangshan Crane Co.,Ltd.

Post code: 453400

is in conformity with

ISO 9001:2008 Standard

This certificate is valid to the following product(s)/service:

Design, development, manufacture and after-sale service of bridge crane, door crane and electric wire rope hoists

Issued on: 2016-07-05
Effective date: 2016-07-05
Validity date: 2018-09-15
Registration Number: CN-0021HQ13837R3M

Michael Drechsel
President of IQNet

Ji XiaoDong
General Manager of CQM

IQNet

THE INTERNATIONAL CERTIFICATION NETWORK

CERTIFICATE

IQNet and CQM
hereby certify that the organization

Henan Kuangshan Crane Co.,Ltd.

Post code: 453400

is in conformity with

ISO 14001:2004 Standard

This certificate is valid to the following product(s)/service:

Design, development, manufacture and after-sale service of bridge crane, door crane and electric wire rope hoists and relevant management activities

Issued on: 2016-07-05
Effective date: 2016-07-05
Validity date: 2018-09-15
Registration Number: CN-0021HE21637R3M

Michael Drechsel
President of IQNet

Ji XiaoDong
General Manager of CQM

IQNet

THE INTERNATIONAL CERTIFICATION NETWORK

CERTIFICATE

IQNet and CQM
hereby certify that the organization

Henan Kuangshan Crane Co.,Ltd.

Post code: 453400

is in conformity with

OHSAS 18001:2007 Standard

This certificate is valid to the following product(s)/service:

Design, development, manufacture and after-sale service of bridge crane, door crane and electric wire rope hoists and relevant management activities

Issued on: 2016-07-05
Effective date: 2016-07-05
Validity date: 2019-07-04
Registration Number: CN-0021H611317R3M

Michael Drechsel
President of IQNet

Ji XiaoDong
General Manager of CQM

第 3421755 号

商标注册证

核定使用商品(第7类)

起重葫芦；天车；起重电磁铁；起重机（商品略去）

注册人 河南省矿山起重机有限公司

注册地址 河南长垣长垣工业区

注册有效期限 自公元2004年07月07日至2014年07月06日止

局长签发

核准续展注册证明

兹核准第3421755号商标续展注册，续展注册有效期自2014年7月7日至2024年7月6日。

二零一四年三月三十日

商标局

注：本证明应与《商标注册证》一并使用。

"守合同重信用"企业公示证明

河南省矿山起重机有限公司获得国家工商行政管理总局2012~2013年度"守合同重信用"企业公示资格，已在国家工商行政管理总局网站（www.saic.gov.cn）公示。

2014年6月

工商行政管理部门对"守合同重信用"公示企业实施动态监管，对存在失信行为的企业将撤销其公示资格。"守合同重信用"企业公示情况以国家工商行政管理总局网站实时公示信息为准。

知識產權署商標註冊處
Trade Marks Registry
Intellectual Property Department

香港特別行政區政府
The Government of the Hong Kong Special Administrative Region

商標註冊證明書
（商標條例）（第559章）
CERTIFICATE OF REGISTRATION OF TRADE MARK
Trade Marks Ordinance (Chapter 559)

商標編號：
Trade Mark No.: 302061497

商標：
Mark:

商標種類：
Mark Type:

商標描述：
Mark Description:

一系列商標：
Series Mark:

擁有人姓名/名稱，地址：
Owner(s)' Name, Address:

擁有人的送達地址：
Owners' Address for Service:

日期：2014年5月28日
Date: 28 May, 2014

Ada K.L. Leung
Registrar of Trade Marks

類別及貨品/服務說明：
Class(es) & Specification(s):

免責：
Disclaimer:

限制：
Limitation:

條件：
Condition:

其他：
Others:

註冊日期：
Date of Registration:

聲稱具有優先權的日期：
Dates of Priority Claimed:

優先權申請編號：
Priority Application No.:

優先權申請的國家，地方：
Country, territory, area of Priority Applications:

澳門特別行政區政府
GOVERNO DA REGIÃO ADMINISTRATIVA ESPECIAL DE MACAU
經濟局
DIRECÇÃO DOS SERVIÇOS DE ECONOMIA

商標註冊證
TÍTULO DE REGISTO DE MARCA

編號 N.º N.º 51816/06

A Direcção dos Serviços de Economia (DSE) emite o presente título de registo para prova do direito de propriedade da marca cujas indicações figuram na(s) folha(s) anexa(s) devidamente autenticada(s).

2014 / 08 / 29
ANO / MÊS / DIA

O Director dos Serviços

SZUTEST TECHNICAL INSPECTION and CERTIFICATION

ATTESTATION OF COMPLIANCE

SZUTEST TECHNICAL INSPECTION and CERTIFICATION

ATTESTATION OF COMPLIANCE

SZUTEST TECHNICAL INSPECTION and CERTIFICATION

ATTESTATION OF COMPLIANCE

СИСТЕМА ДОБРОВОЛЬНОЙ СЕРТИФИКАЦИИ В ОБЛАСТИ ПРОМЫШЛЕННОЙ И ЭКОЛОГИЧЕСКОЙ БЕЗОПАСНОСТИ

СЕРТПРОМБЕЗОПАСНОСТЬ

СЕРТИФИКАТ СООТВЕТСТВИЯ № C-ЭПБ.001.TY00047

ФЕДЕРАЛЬНАЯ СЛУЖБА ПО ЭКОЛОГИЧЕСКОМУ, ТЕХНОЛОГИЧЕСКОМУ И АТОМНОМУ НАДЗОРУ (РОСТЕХНАДЗОР)

Henan Mine (Kuangshan) Crane Co., Ltd
No.18 Chang Nao Industry Park,
Changyuan Country,
Xinxiang City, Henan Province,
Korail

证 书

授予：河南省矿山起重机有限公司

2014年河南省质量诚信AAA级工业企业称号。

有效期：2014年12月-2017年12月

河南省质量技术监督局

二〇一四年十二月

РОССИЙСКАЯ ФЕДЕРАЦИЯ
СЕРТИФИКАТ СООТВЕТСТВИЯ
(обязательная сертификация)

№ C-CN.АГ75.В.04872 ТР 1515002

РОССИЙСКАЯ ФЕДЕРАЦИЯ
СЕРТИФИКАТ СООТВЕТСТВИЯ
(обязательная сертификация)

№ C-CN.АГ75.В.04873 ТР 1515002

矿用产品安全标志证书

SAFETY CERTIFICATE OF APPROVAL FOR MINING PRODUCTS

ПРИЛОЖЕНИЕ

2

Certificate

Granted: Henan Kuangshan Crane Co., Ltd.

Henan Province Credit Quality of industrial enterprises in the title of class AAA for the year of 2014.

Validity:December2014 to December 2017

Henan Bureau of Quality and Technical Supervision

Date: December 2014

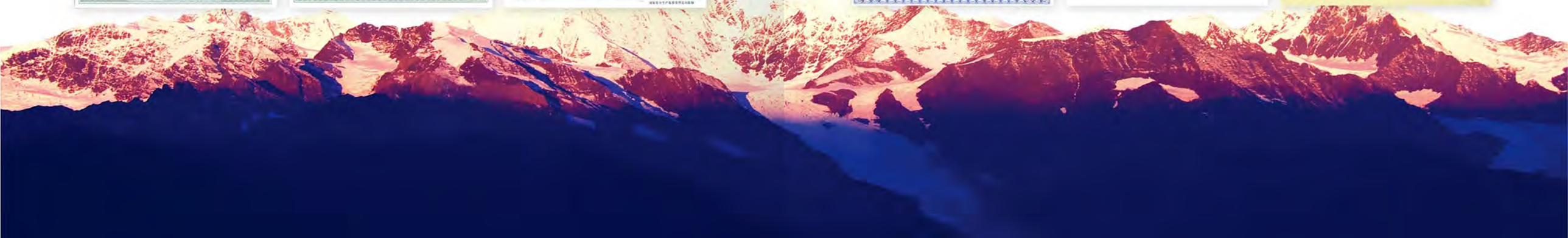

中华人民共和国
特种设备制造许可证
Manufacture License of Special Equipment
People's Republic of China

（起 重 机 械）

编号：TS2410461-2020

单位名称：河南省矿山起重机有限公司
制造地址：河南省长垣县长恼工业区矿山路与纬三路交汇处
经审查，获准从事下列起重机械的制造：

级别	类别	品种	备注
A级	桥式起重机	通用桥式起重机	限QD型320t及以下、QEA型120t及以下、QDY型5t及以下（吊运熔融金属用）、QE型100t及以下、KSQ型250t及以下
		冶金桥式起重机	限YZ型150t及以下（铸造起重机）、YZS型280t及以下（铸造起重机）、YH型40t及以下（浮吊起重机）
		绝缘桥式起重机	限QY型32t及以下、QYS型50t及以下
		防爆桥式起重机	限QB型50t及以下（防爆等级dIIBT4及以下）、QB型75t及以下（防爆等级dIICT4及以下）、LB型16t及以下（防爆等级dIIBT4及以下）防爆梁式起重机、LB型20t及以下（防爆等级dIICT4及以下）防爆梁式起重机、LXB型16t及以下（防爆等级dIICT4及以下）防爆梁式起重机、LHB型50t及以下（防爆等级dIIBT4及以下）防爆梁式起重机、LHB型32t及以下（防爆等级dIICT4及以下）防爆梁式起重机
	门式起重机	通用门式起重机	限MG型125t及以下、ME型160t及以下、MEh型170t及以下、MG型[illegible]t及以下

审批机关：国家质量监督检验检疫总局　发证机关：
有效期至：2020年6月19日　发证日期：2016年4月29日
变更日期：2016年6月20日

国家质量监督检验检疫总局制

副本

中华人民共和国
特种设备制造许可证
Manufacture License of Special Equipment
People's Republic of China

（起重机械）

编号：TS2441280-2020

单位名称：河南省矿山起重机有限公司
单位地址：长垣县长恼工业区矿山路与纬三路交汇处
制造地址：河南省长垣县长恼工业区矿山路与纬三路交汇处
经审查，获准从事下列起重机械的制造：

类型	级别	型式	型号/参数
门式起重机	B	通用门式起重机	MDG 型 50t 及以下 MGB 型 32t 及以下 MDE 型 40t 及以下
	C	通用门式起重机	MZ 型 10t 及以下
	B	轨道式集装箱门式起重机	CMI 型 45t 及以下
	B	电动葫芦门式起重机	MHb 型 32t 及以下 MHLE 型 32t 及以下 MHS 型 32t 及以下 MHE 型 32t 及以下 MHx 型 25t 及以下
	C	电动葫芦门式起重机	MHL 型 20t 及以下 MH 型 20t 及以下 MB 型 20t 及以下 MB. 型 20t 及以下 MHZ. 型 10t 及以下 MHB 型 6t 及以下

审批机关：河南省质量技术监督局　发证机关：
有效期至：2020年6月19日　发证日期：2016年4月25日
（提示：请于有效期满6个月前提交换证申请）

国家质量监督检验检疫总局制

中华人民共和国
特种设备制造许可证
Manufacture License of Special Equipment
People's Republic of China

（起重机械）

编号：TS2410315-2013B

单位名称：河南省矿山起重机有限公司
制造地址：河南省长垣县恼里

型式试验合格，获准下列起重机械产品制造：

类型	型式	型号/参数
超大型起重机械	通用门式起重机	MGG 型 400t

审批机关：国家质量监督检验检疫总局　发证机关：
发证日期：2013年5月21日

国家质量监督检验检疫总局制

副本

中华人民共和国
特种设备安装改造维修许可证
Installation, Alteration,Repair&Maintenance License of Special Equipment
People's Republic of China

（起重机械）

编号：TS3441066-2018

单位名称：河南省矿山起重机有限公司
单位地址：河南省长垣县长恼工业区矿山路与纬三路交汇处

经审查，获准从事下列起重机械的维修：

类型	施工类别	级别	备注
桥式起重机	安装、维修	A	
	改造	A	G≤320t
门式起重机	安装、维修	A	
	改造	A	G≤400t

审批机关：河南省质量技术监督局　发证机关：
有效期至：2018年5月28日　发证日期：2014年5月15日
（提示：请于有效日期满6个月前提交换证申请）　变更日期：2015年6月30日

国家质量监督检验检疫总局制

副本

中华人民共和国
特种设备制造许可证
Manufacture License of Special Equipment
People's Republic of China

（起重机械）

编号：TS2441280-2020

单位名称：河南省矿山起重机有限公司
单位地址：长垣县长恼工业区矿山路与纬三路交汇处
制造地址：河南省长垣县长恼工业区矿山路与纬三路交汇处
经审查，获准从事下列起重机械的制造：

类型	级别	型式	型号/参数
桥式起重机	B	电动葫芦桥式起重机	LH 型 32t 及以下 LHL 型 30t 及以下 LHE 型 40t 及以下 KSX 型 40t 及以下 KSSL 型 40t 及以下
	C	电动葫芦桥式起重机	LHY 型 10t 及以下 （吊运熔融金属用）

审批机关：河南省质量技术监督局　发证机关：
有效期至：2020年6月19日　发证日期：2016年4月25日
（提示：请于有效期满6个月前提交换证申请）

国家质量监督检验检疫总局制

副本

中华人民共和国
特种设备制造许可证
Manufacture License of Special Equipment
People's Republic of China

（起重机械）

编号：TS2441280-2020

单位名称：河南省矿山起重机有限公司
单位地址：长垣县长恼工业区矿山路与纬三路交汇处
制造地址：河南省长垣县长恼工业区矿山路与纬三路交汇处
经审查，获准从事下列起重机械的制造：

类型	级别	型式	型号/参数
桥式起重机	B	通用桥式起重机	QC 型 32t 及以下 QE 型 40t 及以下 QES 型 42t 及以下 YC 型 40t 及以下 QL 型 40t 及以下
	C	通用桥式起重机	QZ 型 20t 及以下 QN 型 16t 及以下 QQ. 型 10t 及以下
	B	电动单梁起重机	LD 型 25t 及以下 LDC 型 20t 及以下 LDE 型 20t 及以下 LX 型 20t 及以下 LDPE 型 32t 及以下
	C	电动单梁起重机	LDT 型 10t 及以下（吊运熔融金属用） LDA 型 10t 及以下 LDP 型 10t 及以下 LDZ 型 8t 及以下

审批机关：河南省质量技术监督局　发证机关：
有效期至：2020年6月19日　发证日期：2016年4月25日
（提示：请于有效期满6个月前提交换证申请）

国家质量监督检验检疫总局制

出口产品质量许可证书

编号：4100JD13008

经检测审查　河南省矿山起重机有限公司
生产的　钢丝绳电动葫芦
符合标准
其生产条件符合出口质量许可制度规定的要求。
特发此证。
有效期至：二〇一六年八月五日

二〇一三年八月六日

计量合格确认证书

豫 量企A2013-24号

河南省矿山起重机有限公司

根据《河南省计量合格确认办法》的规定，参照中华人民共和国国家标准《测量管理体系　测量过程和测量设备的要求》GB/T 19022－2003（ISO 10012:2003，IDT），经审核，你单位计量检测体系符合确认要求，特发此证。

批准人签名：冯[illegible]　发证机关：
批准日期：二〇一三年九月十六日
有效日期：二〇一六年九月十五日

SERIES PRODUCT

With an annual sales volume of over 4,000 gantry cranes,
over 35,000 single-girder cranes as well as about 46,000 single-girder and
double-girder electric hoists and relevant accessories,
the company ranks among the top in the lifting machine industry in terms
of per capital output value and economic benefit.

RAIL TYPE CONTAINER GANTRY CRANE >>

Applicable to remove, load and unload international standard containers. Form of drawing trolley is adopted to achieve light structure, advanced performance, high production efficiency, fine maneuverability and small sensibility to unflatness of the ground. The crane is powered by cable drum.

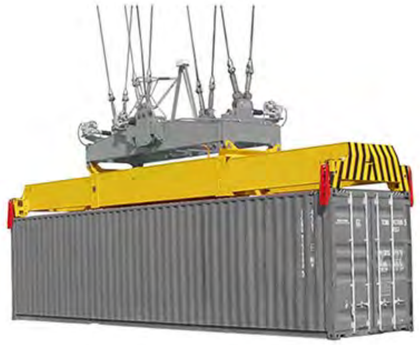

Container spreader

MG DOUBLE-BEAM GANTRY CRANE WITH HOOK >>

MG double-beam gantry crane with hook is composed of gantry, crane crab, trolley mechanism, cabin and electric control system.

The gantry is of a box-shape structure, the girder is bias track double girder and the leg is divided into Type A and Type U according to user's requirements.

The closed cabin is employed for operation, where there are adjustable seat, insulating mat on the floor, toughened glass for the window, fire extinguisher, electric fan and ancillary equipment such as air conditioner, acoustic alarm and interphone which can be equipped if required by users.

MG DOUBLE-BEAM TRUSS GANRTY CRANE >>

MG double-beam truss gantry crane is composed of gantry, crane crab, trolley travelling mechanism, cabin and electric control system.

The gantry is of a truss structure and having advantages of light structure, strong wind resistance and so on, is composed of girder, upper end girder, leg, ground girder, travelling trolley and platform railing. The girder is of a triangular truss structure, on which laid rails for crane crab to transversely move along the girder, The legs, of a truss structure, are weld by section steel. The platform, which is used to place electric equipment and used for repair, is equipped with protection railing outside.

The closed cabin is employed for operation, where there are adjustable seat, insulating mat on the floor, toughened glass for the window, fire extinguisher, electric fan and ancillary equipment such as air conditioner, acoustic alarm and interphone which can be equipped if required by users.

MG_G ROAD-BRIDGE GANTRY CRANE >>

MG_G road-bridge gantry crane is mainly used for bridge construction which is worked at a low rate. It is composed of gantry, windlass crab, trolley travelling mechanism, cabin and electric control system.

The gantry, of a truss structure and having advantages of light structure, strong wind resistance and so on, is composed of girder upper end girder|leg. ground girder travelling trolley and platform railing. The girder is of a triangular truss structure I on which laid rails for crane crab to transversely move along the main girder. The legs are of a box structure or steel tube structure.

The crab is equipped with windlass, which is compact in structure and light in dead weight.

The trolley travelling adopts cycloid gear speed reducer, soft start motor, 4-wheel drive in 8 wheels, so that it can run steadily.

The closed cabin is adopted for operation, where there are adjustable seat, insulating mat on the floor, toughened glass for the window, fire extinguisher, electric fan and auxiliary equipment such as air conditioner, acoustic alarm and interphone which can be equipped as required by users.

ME SHIPBUILDING GANTRY CRANE >>

ME shipbuilding gantry crane, a type of gantry crane of heavy lifting load, large span and high lifting altitude, is special for fragmented transport, end-to-end Joint and turning operation of large ship hulls

Main technical characteristics, It have multiple functions of single hanging, hoisting, turnover in the air, slight horizontal turnover in the air and so on;

The gantry falls into two categories: single girder and double girder To rationally utilize materials, the girder adopts optimum design of variable section

The upper trolley has two main hooks, which are separately fixed at the outside of the girder

The lower trolley has a main hook and a secondary hook, which are fixed at the center of the two girders;

Both the upper crab and the lower crab can cross each other for operation

All operating mechanisms employ frequency control;

On the top of the girder at the side of rigid leg is equipped a jib crane to accomplish maintenance of upper and lower crabs

To prevent storm attack, such safe and reliable anti-wind devices as rail clamp and ground anchor are equipped

L GANTRY CRANE >>

L gantry crane is mainly composed of gantry, crane crab, trolley travelling mechanism, cab and electric control system.

The gantry is of a box-shape structure The crab adopts vertical reaction wheel when the lifting load is below 20t, and horizontal reaction wheel when above 20t to run at the girder side The girder is of single-girder bias track and the leg is L-shaped, so that the lifting space is large and the spanning ability is strong, making it easy to covey cargos from the span to under the Jib .

The closed cab is employed for operation, where there are adjustable seat, insulating mat on the floor, toughened glass for the window, fire extinguisher, electric fan and auxiliary equipment such as air conditioner, acoustic alarm and interphone which can be equipped as required by users.

MH GANTRY CRANE WITH ELECTRIC HOIST >>

MH gantry crane with electric hoist is middle-and small-size lifting equipment which runs on rails It is mainly composed of gantry(girder, leg, lower cross beam, etc) , hoisting mechanism, travelling mechanism and electric control part With the electric hoist as hoisting mechanism, it runs along the lower flange of the I steel of the girder The girder is of box-shape structure and truss structure The former boasts good techniques and easy fabrication, and the latter is light in dead weight and strong in wind resistance The complete machine features light dead weight, simple structure and easy installation and maintenance, so that it is applicable to outdoor operational sites of medium and small lifting load for general handling such as factories and mines, freight yards and warehouses It is prohibited to operate in the environment with inflammable, explosive and corrosive gas.

It has three operation modes: pendant control. wireless remote control and cabin control.

MGB SEMI-GANTRY CRANE >>

MGB double-girder semi-gantry crane with hook

The double-girder semi-gantry crane with hook is mainly composed of gantry, crane crab, trolley travelling mechanism and electric control system.

The gantry, of a box-shape structure, has a leg at its one side and runs along the ground rails, and has no leg at the other side and runs along the rails on the factory workshop.

The closed cabin is employed for operation, where there are adjustable seat, insulating mat on the floor, toughened glass for the window, fire extinguisher, electric fan and auxiliary equipment such as air conditioner, acoustic alarm and interphone which can be equipped as required by users.

The rest structure and configuration are the same as the MG double-girder gantry crane.

MB SEMI-GANTRY CRANE >>

MB semi-gantry crane with electric hoist

The semi-gantry crane with electric hoist, a type of middle-and small-size lifting equipment which runs along rails, is mainly composed of gantry(girder, leg, lower cross beam etc), hoisting mechanism, travelling mechanism and electric control part With the electric hoist as hoisting mechanism, it runs along the lower flange of the I-steel of the girder The gantry has a leg at its one side and runs along the ground rails, and has no leg at the other side and runs along the rails on the factory workshop The rest structure and configuration are the same as the MH gantry crane with electric hoist.

YZS CASTING BRIDGE CRANE >>

Casting bridge cranes are the main handling equipment for smelting workshop of steel works They are used for conveying, pouring and hot metal charging of liquid metal in smelting process YZS casting bridge crane, adopting main crab and auxiliary crab, and four-girder and four-rail structure, is composed of bridge, main trolley, auxiliary trolley, connecting traverse, trolley travelling mechanism and electric part The main trolley runs at the rails outside the bridge, and the auxiliary trolley runs at the rails inside the bridge The main trolley employs the connecting transverse as the load handling device to hoist steel ladle, and the auxiliary trolley, employing the hook as the load handling device, runs across under the main crab to accomplish pouring of molten steel and steel slag, and other auxiliary hoisting in coordination with the main hook.

The trolley travelling mechanism and main electric equipment are installed in the girder The girder's electric panel room employs rock wool for heat insulation, and has an air cooler inside To reduce heat radiation of molten steel to metal structural members, a thermal baffle is set along the span direction at the bottom of the girder.

The trolley travelling mechanism adopts four-corner drive.

The crane is equipped with a special electronic scale, and there are display devices in the cabin and on the bridge. The main hoisting mechanism is equipped with an over speed switch.

YZ CASTING BRIDGE CRANE >>

YZ casting bridge crane, of a double girder single-crab structure, is mainly composed of bridge, crab, connecting traverse. trolley travelling mechanism and electric part The main hook employs the constant-spacing connecting traverse as the load handling device to hoist steel ladle and the auxiliary hook acts in concert with the main hook to accomplish pouring of molten steel and steel slag and other auxiliary hoisting.

The trolley travelling mechanism and main electric equipment are installed in the girder The girder's electric panel room employs rock wool fol heat insulation, and has an air cooler inside To reduce heat radiation of molten steel to metal structural members, a thermal baffle is set along the span direction at the bottom of the girder.

The trolley travelling mechanism adopts four-corner drive.

The crane is equipped with a special electronic scale, and there are display devices in the cabin and on the bridge The main hoisting mechanism is equipped with an over speed switch

QDY CRANE FOR HOISTING MOLTEN METAL >>

QDY crane for hoisting molten metal

Based on improvements of QD general bridge crane, QDY crane is designed and manufactured according to the provisions of the Notice on Opinions of Renovation of Metallurgic Hoisting Machinery(ZJBT [2007] No.375) issued by the State Administration for Quality Supervision and Inspection and Quarantine and relevant technical specifications The classification group of the equipment is A7, and its lifting load is below 74t It is mainly applicable to hoisting molten metal in smelting workshops It is mainly composed of box-shape bridge, crane trolley, trolley travelling mechanism and electric control system.

QD ELECTRIC DOUBLE-GIRDER BRIDGE CRANE WITH HOOK >>

QD electric double-girder bridge crane with hook is the widely used hoisting machinery currently It is mainly comprised of box-shape bridge, crane crab, trolley travelling mechanism and electric control system. The load handling device is the hook.

On the girder laid rails for crane crab to transversely move. The girder is weld with the box-shaped end girder At the middle of the end girder are joints which are fastened with bolts for fragmented transportation of bridges The platform is used to place trolley travelling mechanism. electric equipment and used for repair.

It has three operation modes: ground control, wireless remote control and cabin There are two kinds of cabin open cabin and closed cabin, where there are adjustable seat, insulating mat on the floor, toughened glass for the window, fire extinguisher, electric fan and auxiliary equipment such as air conditioner, acoustic alarm and interphone which can be equipped as required by users.

The crane can be equipped with load handling devices such as motor grab. electromagnetic chuck to meet the requirements of hoisting varied types of materials.

The crane, of a classification group of A3~A7, has a commonly used lifting load of 3 ~ 250t, so that it is suitable to work in factories, warehouses and freight yards where the ambient temperature is -10℃ ~ 40℃and the relative humidity is not more than 85%It is prohibited to work in the environment with inflammable, explosive and corrosive gas.

YC UPPER ROTARY BRIDGE CRANE >>

This type crane mainly employs hung girder to hoist long objects like billets, and is equipped with electromagnetic chuck to hoist it is composed of box-shaped bridge. crane trolley, trolley travelling mechanism, cabin and electric control system It is also equipped with blackout magnetic system.

The girder is a middle-rail box girder, on which laid rails for crane trolley to transversely move The girder is weld with the box-shaped end girder.

At the middle of the end girder are Joints which are fastened with bolts for fragmented transportation of bridges The platform is used to place trolley travelling mechanism, electric equipment and for repair It is equipped with protection railing outside.

The crane trolley consists of upper trolley and lower crab The latter is travelling crab and the former is rotating crab They are equipped with hoisting mechanism and rotary mechanism, respectively The upper crab is furnished with a circular orbit for rotating, which acts in concert with horizontal wheels to fulfill the purpose of rotating long cargo.

QZ ELECTRIC CRAB BRIDGE CRANE >>

QZ model electric grab bridge crane is mainly comprised of box-shaped bridge, grab trolley, trolley travelling mechanism, cabin and electric control system The load handling device is the grab which is able to capture bulk materials.

The grab trolley has switching mechanism and lifting mechanism The grabs are separately hung over the switching mechanism and lifting mechanism with four steel wire ropes The switching mechanism drives the grab to close to grab materials When the grab is closed. the lifting mechanism shall be started immediately to hoist the four evenly loaded steel wire ropes Discharging only needs to start the switching mechanism, which opens the grab to pour materials

Except the lifting mechanism, the crane is basically the same as the bridge crane with hook.

QL ELECTRIC BRIDGE CRANE WITH CARRIER-BEAM >>

QL model bridge crane with carrier-beam is applicable to hoisting long section steel, bars, plates, scrap steel, mill coil and so on.

The hook and carrier-beam are releasable connection. They are equipped with electromagnetic chuck or clincher or special group hook underneath to hoist things There two layout forms of carrier-beam: perpendicular to the girder or parallel to the girder.

LH DOUBLE-GIRDER CRANE WITH ELECTRIC HOIST >>

LH model double girder crane with electric hoist consists of box-shaped bridge, trolley travelling mechanism, trolley and electric equipment.

It employs fixed electric hoist which is fitted on trolley frame as hoisting mechanism The trolley uses LD drive to run, while the trolley adopts LD drive or QD drive. The structure, simple and convenient, features low entire height and light dead weight, so that it is applicable to operational sites of medium and small lifting load such as factories and mines, workshops and warehouses it has three operation modes ground control, wireless remote control and cabin control The cab has two types open cabin and closed cabin.

QY OVERHEAD INSULATION CRANE >>

QY model overhead insulation crane is basically the same as bridge crane with hook in terms of structural style To avoid the charged equipment which may conduct electricity to the crane by hoisted cargo from endangering the driver's life, insulation equipment is set on the hook group, trolley frame, trolley wheel (or under the trolley rails). The insulation material is usually epoxy phenol aldehyde glass cloth laminated board The crane is applicable to aluminum and magnesium smelting factories.

NEW TYPES OF CRANES >>

KSQ BRIDGE CRANE

Design, production and inspection carry out the last issued relevant national standard, equivalently adopts some foreign criteria including FEM, DIN and IEC Compared with the general QD model bridge crane, its weight is reduced by about 15~30% the maximum wheel pressure is reduced by about 10~35%, which reduce the requirements of crane for factory building structure and reduce production cost. As the core component of driving mechanism, reducer gear pair with hard tooth surface and high accuracy, together with steel reel, forged wheel and variable-frequency speed regulating system, which makes this type of crane become renewal product of traditional general bridge crane and applied in industry of machinery production, assembling, petrochemicals, warehouse logistics, electric power construction, paper making and rails.

KSSL ELECTRIC HOIST BRIDGE CRANE

KSSL electric hoist bridge crane uses new electric hoist as hoisting mechanism Crane and trolley use 3-in-1 form and the overall dimension is smaller and lighter.

New electric hoist uses reducer with C-type structure The integration compact design of lifting motor, reducer, coiling block and lifting limit switch saves space for user Standard rope guide is made by using engineering plastics with strong abrasive resistance and good self-lubricating property.

Lifting motor uses duplex winding squirrel-cage pole-changing motor and can achieve speed ratio of 16 It is equipped with double disc electromagnetic disc brake which is integrated in the end of motor When the motor power goes off, the brake will close automatically to avoid creeping down of load Braking clearance of brake doesn't need to be adjusted manually after set for the first time(the clearance can be adjusted automatically through brake spring)When the thickness of brake pad is lower than the set point, it can give an automatic alarm through additional monitor switch and remind user to change the brake pad Being safe and reliable, double disc electromagnetic disc brake can make 1 million times braking and It doesn't need maintenance during the safe service life.

Running mechanism is compact in structure by using "electromotor + reduction box+ travelling wheel" 3-in-1 structure. By coordinating with variable-frequency speed control system, the starting is stable and has no shock, largely reducing shaking during hoisting heavy and enhancing safety of operation Low speed with heavy load and high speed with light load improves production efficiency

LDA, LDC, LX ELECTRIC SINGLE-GIRDER CRANE >>

LDA electric single-girder crane

LDA electric single-girder crane is composed of girder weld by steel plate and I-steel, end girder, electric hoist and travelling mechanism, The electric hoist runs along the lower flange of the I-steel of the girder to accomplish cargo hoisting, It features light structure and easy installation and maintenance, and is widely used for different places for hoisting such as factories warehouses and material yards. It is prohibited to use in the environment with inflammable, explosive and corrosive media. The span of it is 7.5 ~ 22.5m (subject to non—standard design according to user's requirements). The classification group is A3, and the operating ambient temperature is -25℃ ~ 40℃.

It has three operation modes: ground control, remote control and cabin control. The cabin has two types: open cabin and closed cabin.

The travelling motor can be soft start motor and variable-frequency adjustable-speed motor according to user requirements The crane can start steadily, runs safely and reliably.

LDC electric single-girder crane

LDC electric single girder crane is composed of box-shaped girder weld by steel plates, end girder, electric hoist and travelling mechanism. The lower flange(material 16Mn) of the girder is the travelling orbit of electric hoist to accomplish cargo hoisting The electric hoist, of low headroom structure, can effectively increase the lifting height, so that it is applicable to the places where the workshop is low and the requirement of lifting height is high.

LX electric single-girder crane

LX electric single-girder suspension crane is composed of girder weld by steel plate, I-steel and end girder electric hoist and electric trolley. It can be hung on the I-beam orbit on the top of the workshop, with the cantilever length of 05 ~ 1m. The electric hoist runs along the lower flanges of the I-steel of the girder to accomplish article hoisting, featuring dexterous structure and easy installation and maintenance. It is widely used for such places as workshops, warehouses and stock yards. The span is 3 ~ 16m (subject to non-standard design according to user's requirements). The classification group is A3 and the operating ambient temperature is -25℃ ~ 40℃.

LDP ELECTRIC SINGLE-GIRDER CRANE >>

LDP electric single-girder crane is a small-size low headroom crane. The electric hoist is at one side of the girder, which increases the work space of the hook and reduces the workshop height and cost. It is applicable to the places where the workshop's headroom is low.

The crane is composed of box-shaped girder weld by steel plates, end girder. trolley and travelling mechanism The trolley consists of traveling end girder, trolley frame and fixed electric hoist The trolley is partially hung and runs at one side of the girder. The electric hoist is raised to the upside of the girder from under the girder, which effectively increasing the lifting altitude.

The crab is braked by conical motor and driven by exposed gear.

The girder,of box-shaped structure and bias rails, has horizontal wheels at the upper and the lower, so that it is safe and reliable and can avoid rail gnawing.

The trolley adopts separate drive, conical motor brake and exposed gear drive The travelling motor can be soft start motor and variable-frequency adjustable-speed motor according to user requirements.The crane can start steadily and runs safely and reliably

It has three operation modes : ground control, remote control and cabin control The cabin control has two types: open cabin control and closed cabin control The span of it is 7.5 ~ 22.5m(subject to non-standard design according to user's requirements)The classification group is A3 and the operating ambient temperature is -25℃ ~ 40℃

ELECTRIC HOIST >>

Electric hoist is small lifting equipment, featuring small volume, light dead weight, easy operation and convenient use It is used for such places as industrial and mining establishments and warehouses and wharfs.

NEW TYPES OF ELECTRIC HOIST >>

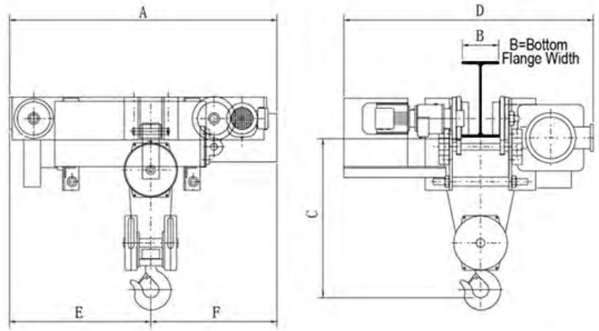

It employs motor of hoisting mechanism and reducer imported from Germany The integrated and compact design of hoisting motor, reducer, reel and limit switch saves space for the user Modular design increases the reliability of mechanism meanwhile reduces the time and cost for maintaining.

It has more and faster hoist speed and various pulley ratio which can be selected. The standard traveling mechanism of trolley is controlled by converter with speed of 20m/min, which makes a little swing and accurate position if hoisting items while trolley traveling as well as lifts precision and valuable items reliably.

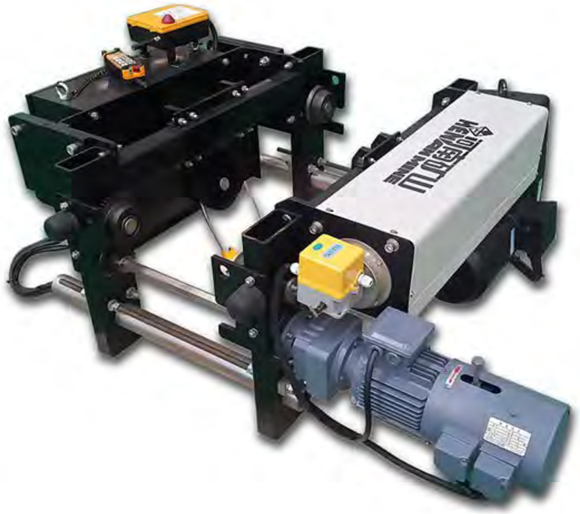

PRODUCTION EQUIPMENTS

Having various processing equipment of 1,300 sets (includes Boring machine, milling machine, etc.), the company can independently complete the whole technological process of manufacturing, assembly, heat treatment, etc. The company is now launching a new hoist project, into which about RMB 200 million has been initially invested. The company now has built 12,000 m2 standard constant temperature workshops and has purchased advanced equipment like Korea Doosan five-axis simultaneous motion machining centers, Doosan CMJ vertical machining centers and Beiji XHAE788 precision vertical machining centers. When completed and put into service, the project can produce 6,000 new-type hoists, whose performance meet international standards.

Machining center of New Types of Cranes numerical control machine

U-shape box adopts one-time forming technology

U-shape groove' s forming at one time by high-accuracy cold bending exempts many complicated production flows in traditional mode of production, such as burnishing. cutting and welding, reduces distortion of the girder of single-girder cranes in conveying. guarantees the girder's accuracy of single-girder cranes, decreases the welding stress and weld fatigue in action, and at the same time greatly increases the complete machine's strength, improves the work efficiency and better the crane's apparent quality.

Large -size steel plate pretreatment shop-blasting machine

Automatic paint -spraying assembly line of electric hoist

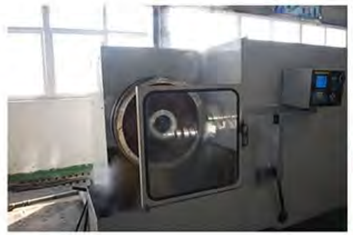

Medium -frequency quenching equipment

Quenching stove

V METHOD CASTING PRODUCTION LINE

ONE TIME FORMING PRODUCTION LINE OF LATERAL PLATES

END BEAM PRODUCTION LINE

SINGLE BEAM WELDING MANIPULATOR

PRETREAT MACHINE FOR STEEL PLATE

THE FORGING WHEEL ASSEMBLY LINE

WHEEL QUENCHING WORKSHOP

LD WHEEL PRECISE PROCESSING WORKSHOP

LARGE NUMERICAL CONTROL VERTICAL

600 TONS TEST PLATFORM

ELECTRIC HOIST TESTING CENTER

CNC PLASMA CUTTING MACHINE TOOLS

MAIN BEAM WORKSHOP EQUIPMENT

U-SHAPE SLOT ONE-TIME FORMING PRODUCTION EQUIPMENT

PINION GEAR NUMERICAL CONTROL MACHINE TOOL

LARGE GROUND BORING MACHINE

LARGE DRUM LATHE MACHINE

MADE IN CHINA No.
MARKS : YT 22

07/09/2012 14:57

07/09/2012 18:24

BICKMERE

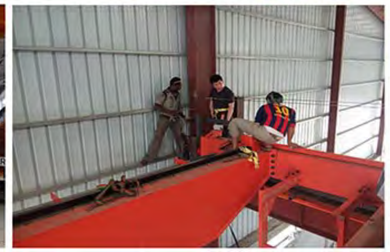

Our products are exported to over 120 countries and regions

中船重工
长江航运集团
中远集团
中国外运长航 SINOTRANS&CSC
DSIC 大连船舶重工集团
渤海船舶重工
江南造船集团
沪东中华造船有限公司
广州广船国际股份有限公司
武昌船舶
金东纸业 GOLD EAST PAPER
晨鸣集团
中国水电 SINOHYDRO
中国电力投资集团公司
中国国电 CHINA GUODIAN
STATE GRID CORPORATION OF CHINA
XAFD 国水西安风电
中国电建 POWERCHINA
中国华能 CHINA HUANENG
中核集团
青海水电集团
广东水电
中国华电 CHD
CGGC 中国葛洲坝集团
中国中铁
中国交通建设
中铁隧道集团
北京铁路局
广东交通集团
BMRBH
中国建筑
上海建工集团
北京城建集团
北京建工集团
浙建集团
湖南建工
首钢集团
攀钢集团
HBIS 河北钢铁集团有限公司
MCC 中冶集团
武钢集团
邯钢集团

宝钢集团
TISCO 太原钢铁集团
包钢集团
MA STEEL 马钢集团
ANSTEEL 鞍钢集团
CHALCO 中国铝业
神华宁夏煤业集团
晋城煤业集团
中国石油
Sinopec
CNOOC
HNCC 河南煤业化工集团
晋中能源
山东能源集团有限公司
中国平煤神马能源化工集团
兖矿集团
YICAI 伊泰
AVIC 中国航空工业集团
CASC 中国航天科技集团
哈飞工业 HAFEI INDUSTRY
AVIC 西安飞机工业集团
ATAECO 厦门太古飞机工程有限公司
COSIC 航天晨光
SAC 沈阳飞机工业集团
中国商飞 COMAC
昌河飞机工业集团
CATIC 中国航空技术进出口总公司
一汽大众
北京奔驰
SANY 三一重工
CNHTC 中国重汽 SINOTRUK
CNR 中国北车
CSR 中国南车
华泰汽车 HAWTAI AUTOMOBLE
国机集团 SINOMACH
CIMC
上海电气 SHANGHAI ELECTRIC
潍柴动力 WEICHAI POWER
中信重工